CANNON®
BAR WORKS LTD.

"The Best Bar - Bar None!"®

BAR MOUNTS

5525 - 272nd Street, Unit A120, Langley, BC V4W 1P1 Canada
Toll Free: 888-604-9990
www.cannonbar.com

CHAINSAW BAR MOUNTS
CSB and CSM

P4

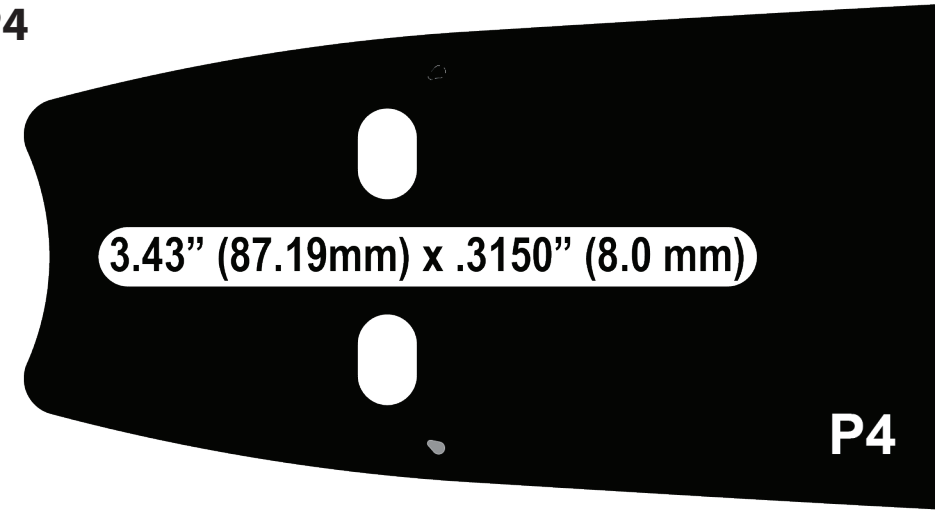

OEM Applications
Most Echo and McCulloch models

Cannon P4

Oregon D176

C1

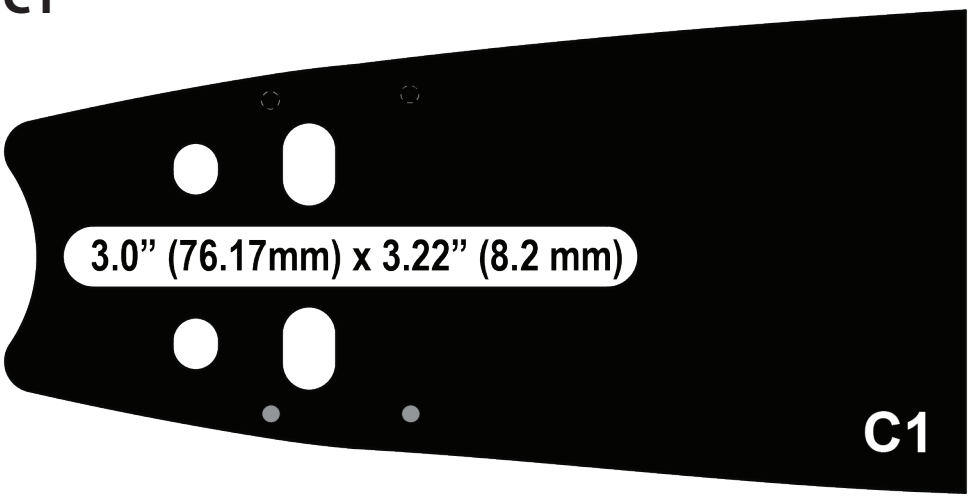

OEM Applications
Most small Dolmar, Echo, Husqvarna, Jonsered, Makita, Poulan, Shindaiwa and Stihl models

Cannon C1
Combination Mount

Oregon A041, K041, A064, A074, A095, K095

Stihl 3005

H5

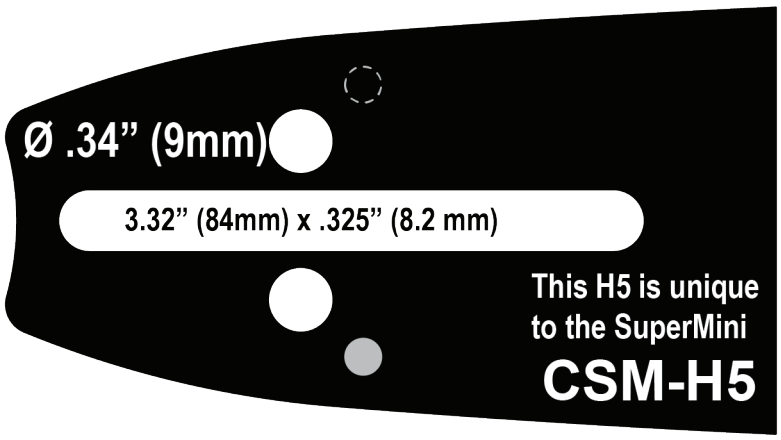

OEM Applications
Cub Cadet, Dolmar, Homelite, Husqvarna, John Deere, Jonsered, Makita, McCulloch, Oleo-Mac, Pioneer, Poulan, Redmax, Sears, Solo and others

Cannon H5

Oregon A095

H6

OEM Applications
Cub Cadet, Dolmar, Homelite, Husqvarna, John Deere, Jonsered, Makita, McCulloch, Oleo-Mac, Pioneer, Poulan, Redmax, Sears, Solo and others

Cannon H6

Oregon K095

S5

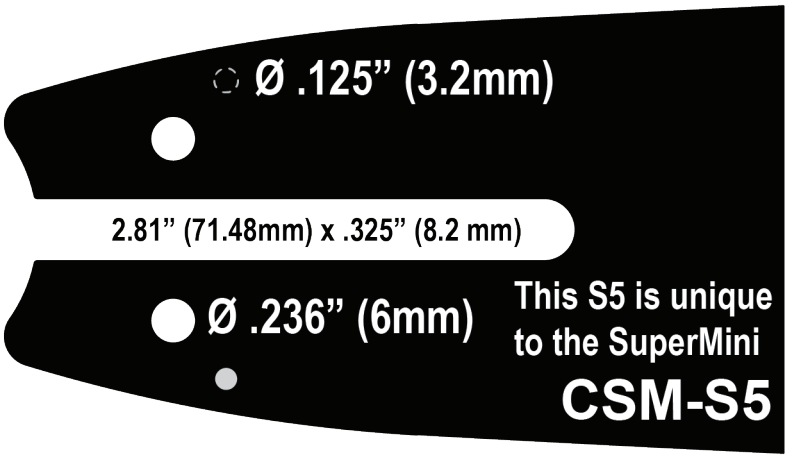

OEM Applications
Small Stihl and Olympyk (Oleo-Mac) models

Cannon S5

Oregon A074
Stihl 3005

H1

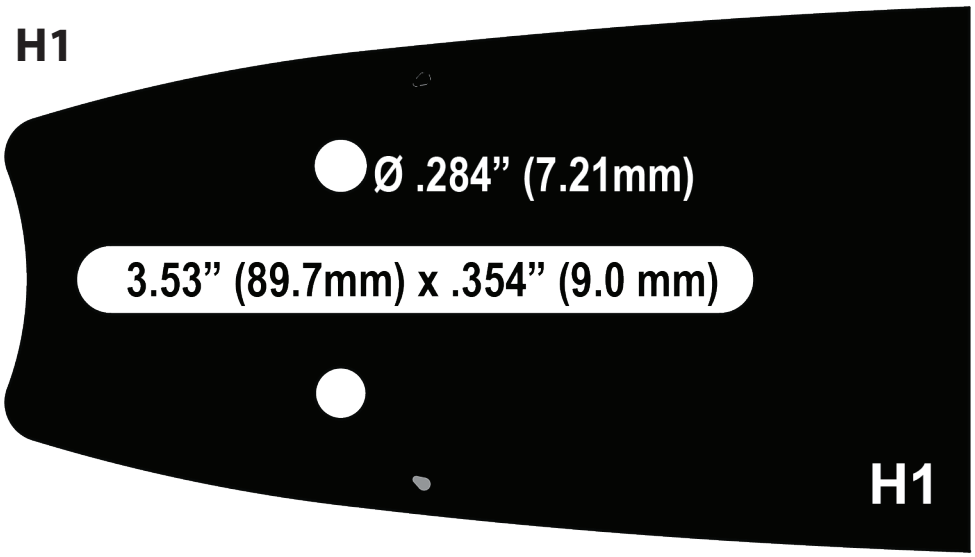

OEM Applications
Most Dolmar, Husqvarna, Jonsered, Makita, Shindaiwa and Solo models

Cannon H1

Oregon D009

S1

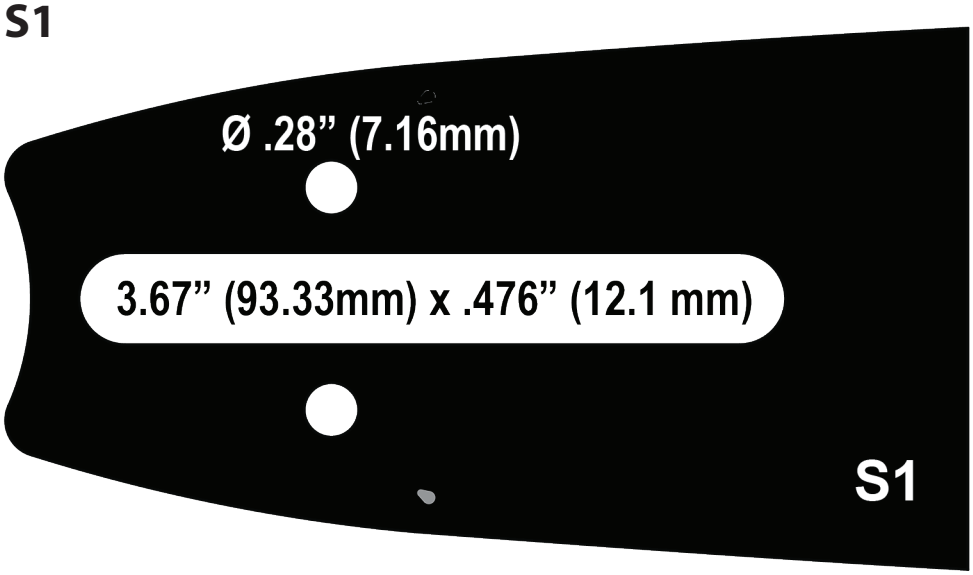

OEM Applications
Most Stihl models

Cannon S1

Oregon D025

Stihl 3003

S2

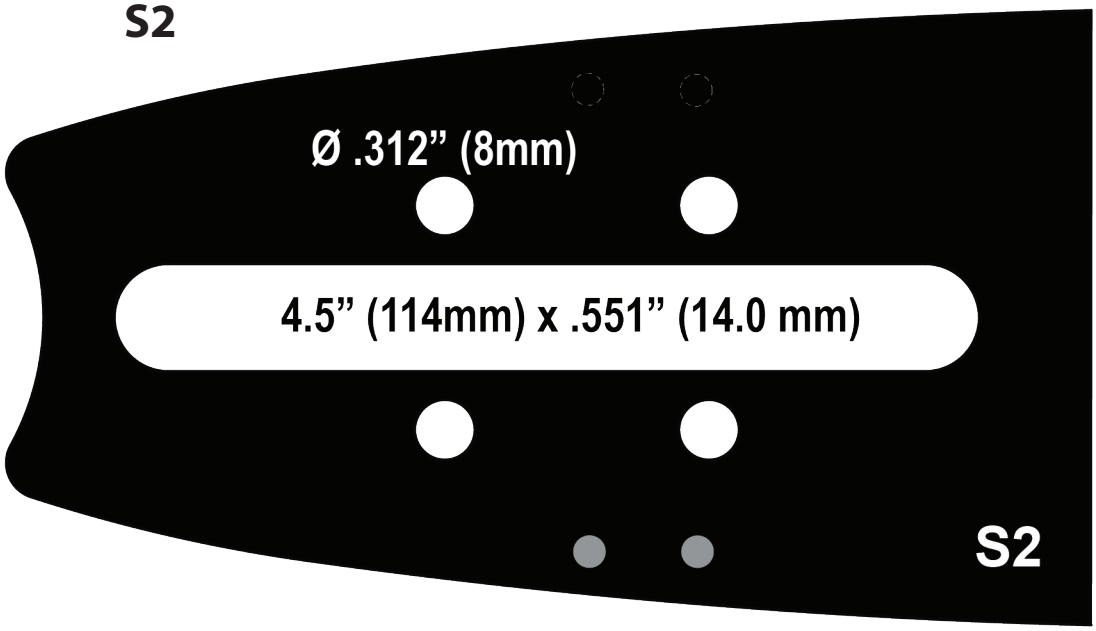

OEM Applications
Larger Dolmar, Olympyk and Stihl models

Cannon S2

Oregon D033, E031, E086, E099

Stihl 3002

CHAINSAW MILLING MOUNTS
CDE

G1

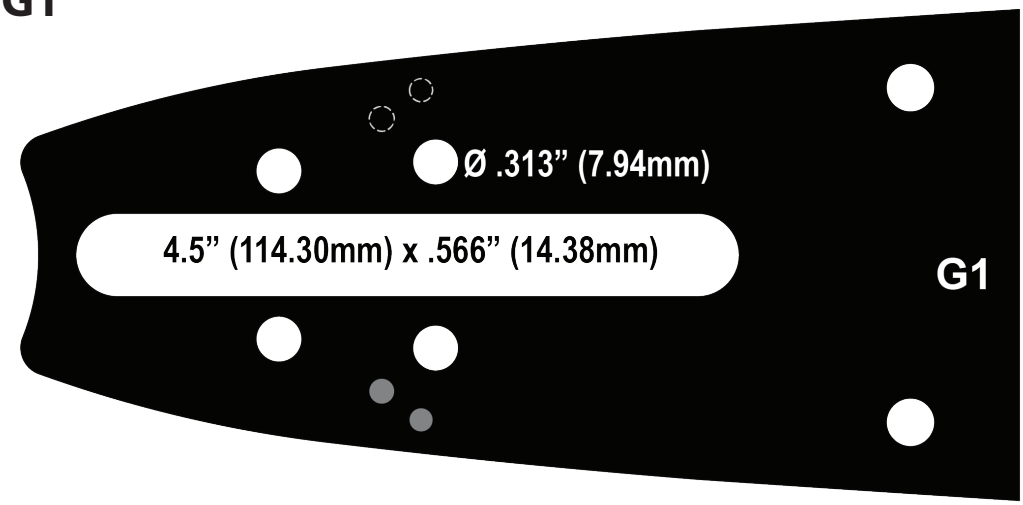

OEM Applications
Double Ended Universal mount; see adaptor plate selection

Cannon G1

LM

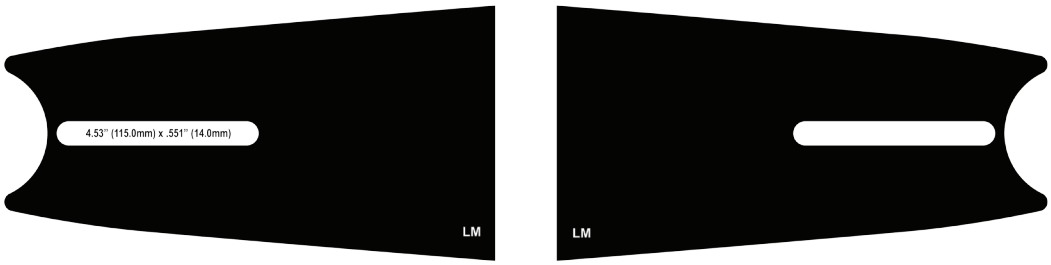

OEM Applications
Lucas Mill

Cannon LM

LM1

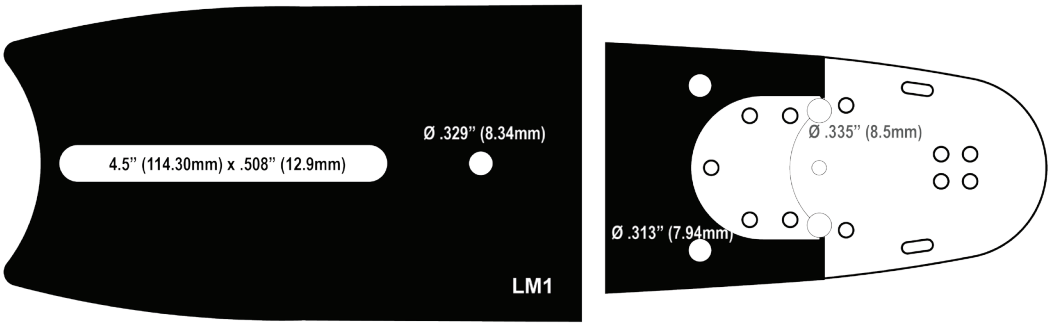

OEM Applications
Lucas Mill

Cannon LM1

LM2

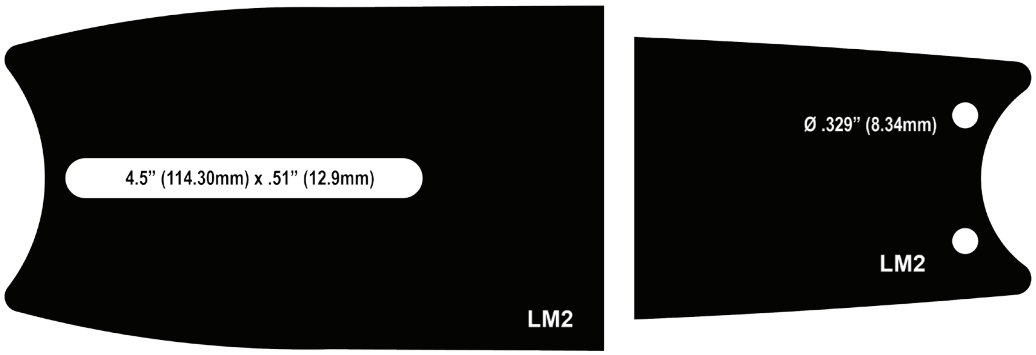

OEM Applications
Lucas Mill

Cannon LM2

PM

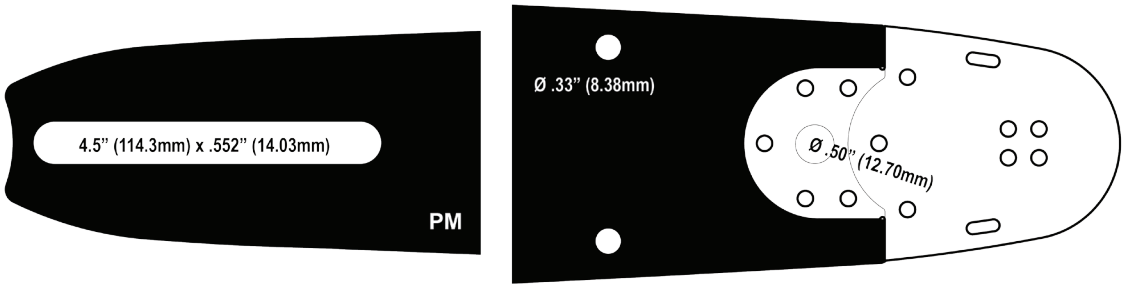

OEM Applications
Peterson Mill

Cannon PM

PM1

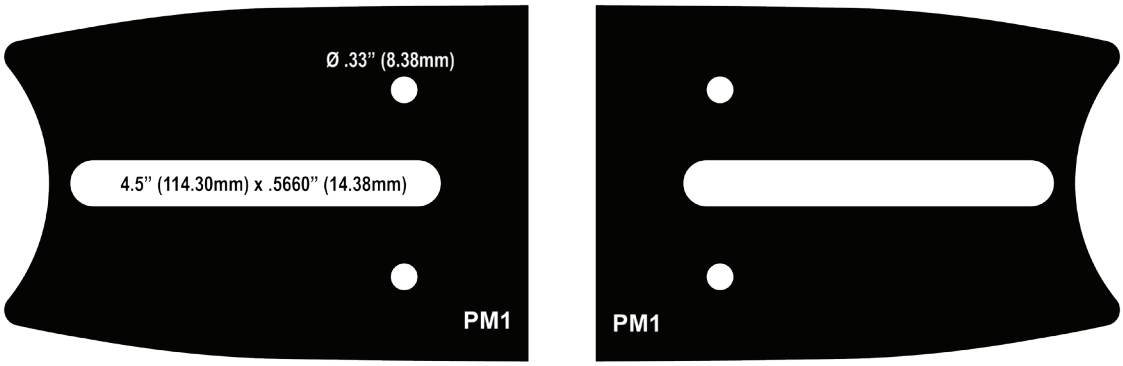

OEM Applications
Peterson Mill

Cannon PM1

FIREWOOD PROCESSOR MOUNTS
CBV and CBB

B1

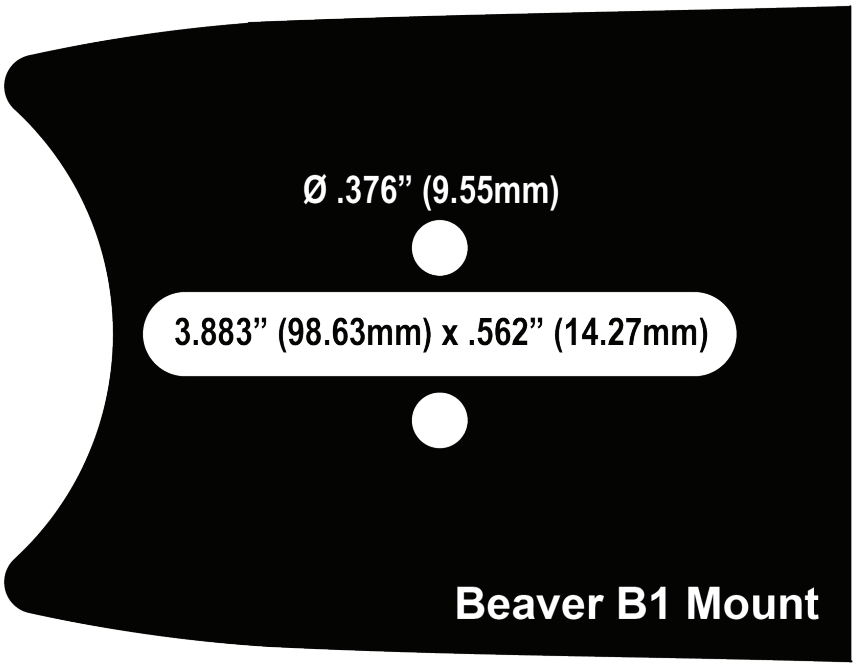

OEM Applications
Beaver

Cannon B1

B2

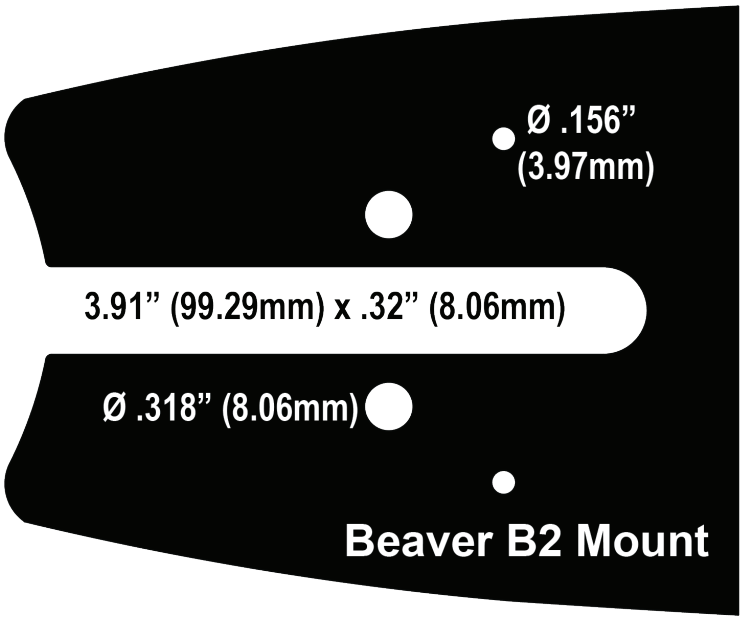

OEM Applications
Built Rite

Cannon B2

HARVESTER BAR MOUNTS
.404” CHA
3/4“ CHV

A1

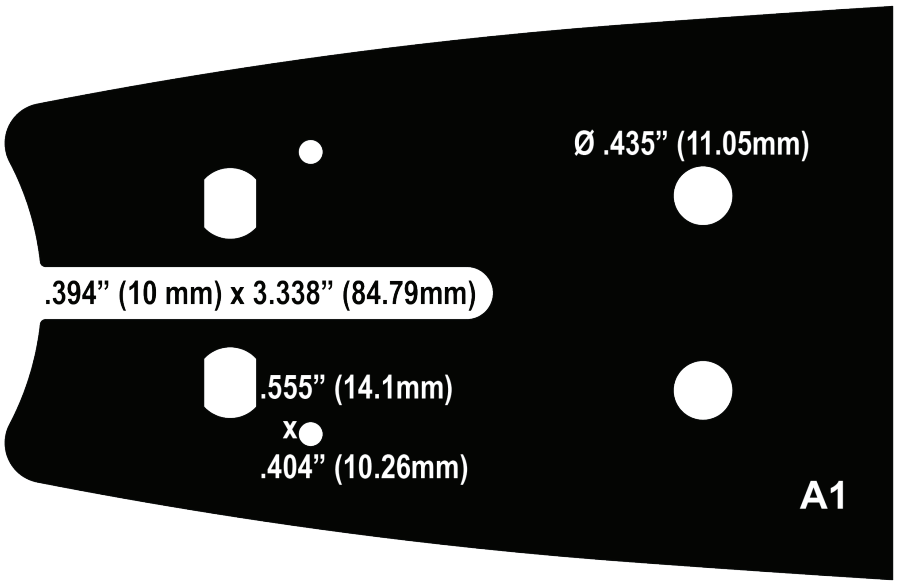

404 Pitch

Cannon A1

Oregon L104, L114

F1

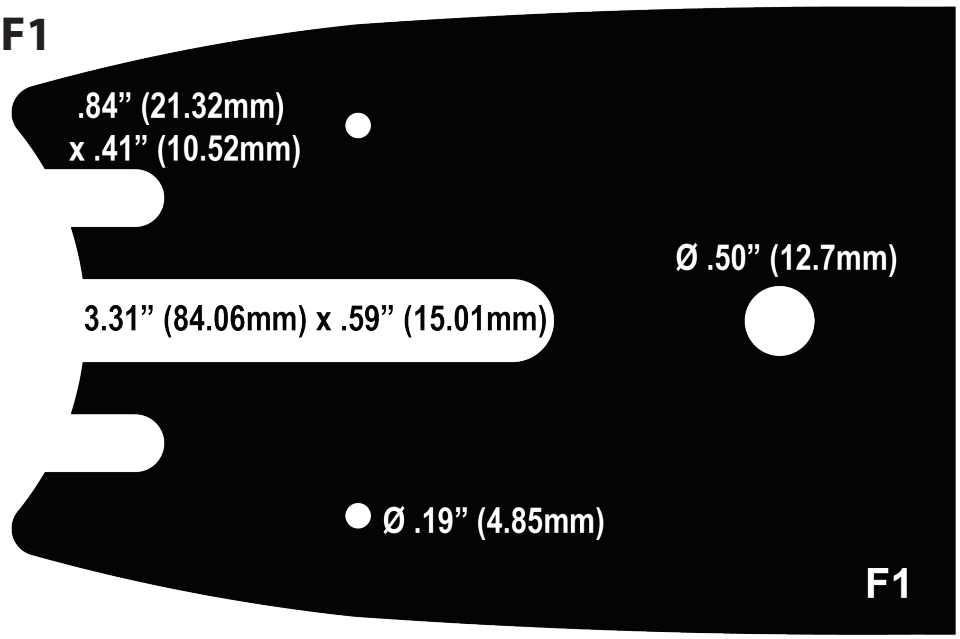

404 Pitch

Cannon F1

Oregon B149

F2

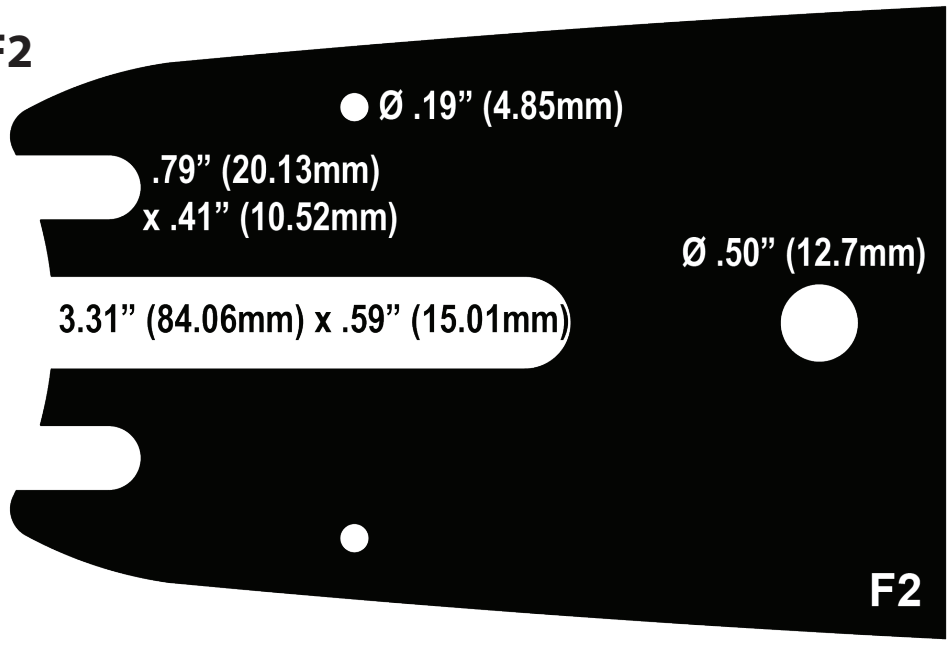

404 Pitch

Cannon F2

Oregon L149

F4

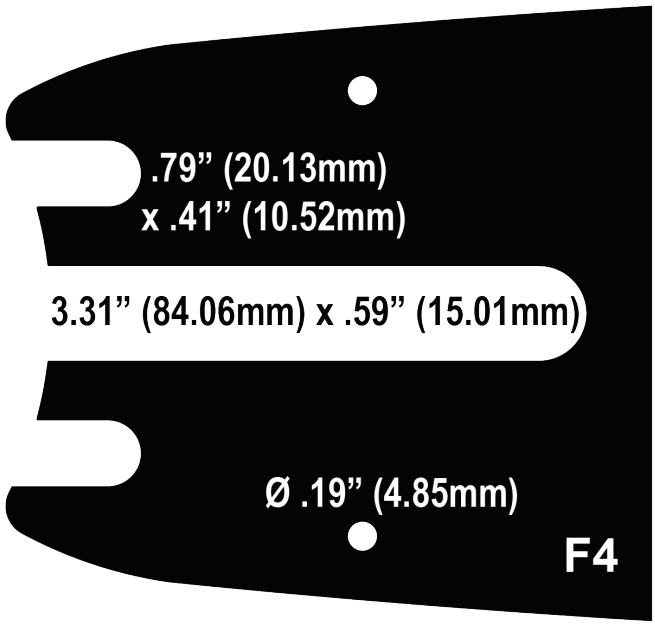

404 Pitch

Cannon F4

OregonL163

N1

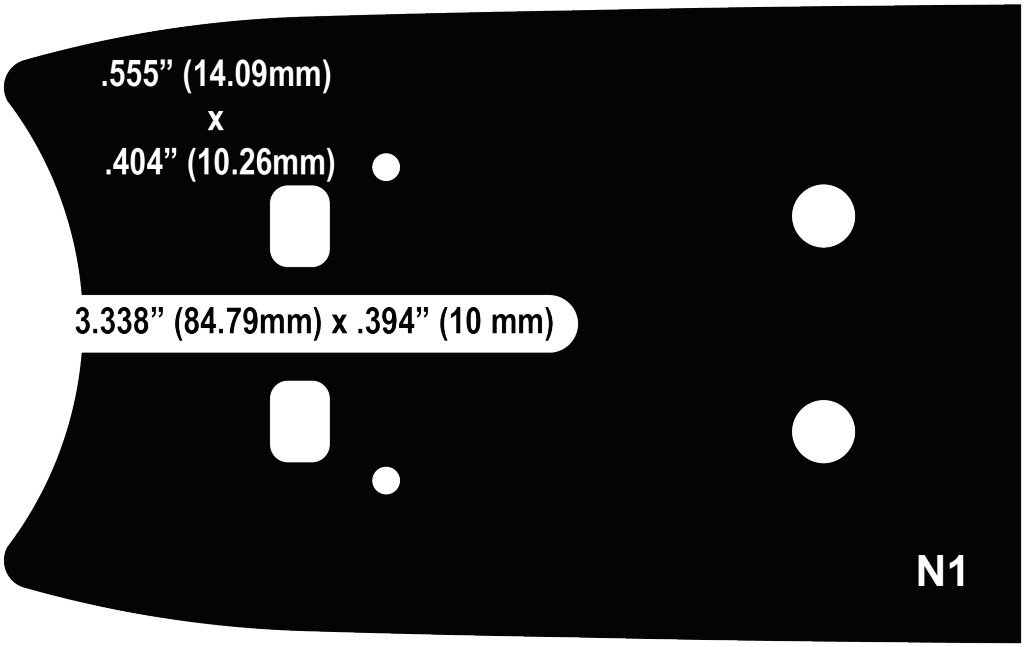

404 Pitch

Cannon N1

Oregon N104, N114

A5

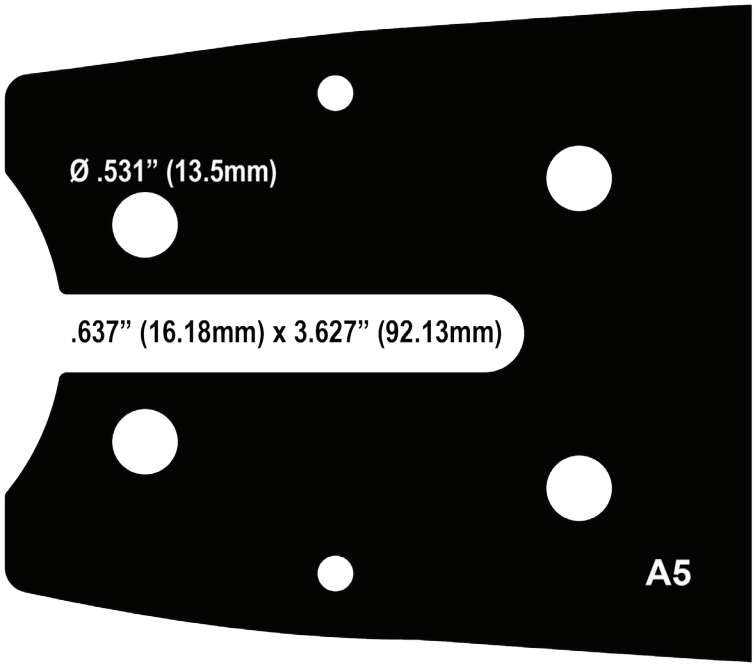

3/4 Pitch

Cannon A5

Oregon T146

F8

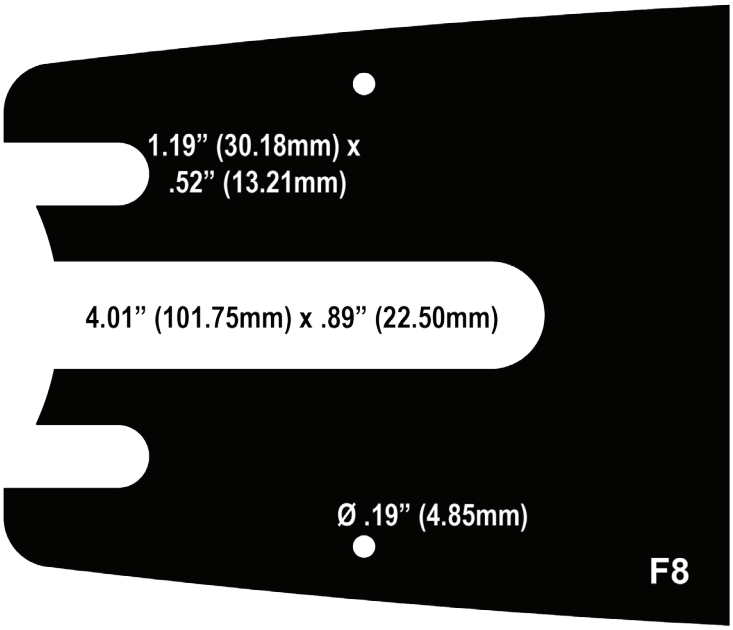

3/4 Pitch

Cannon F8

Oregon T227

F9

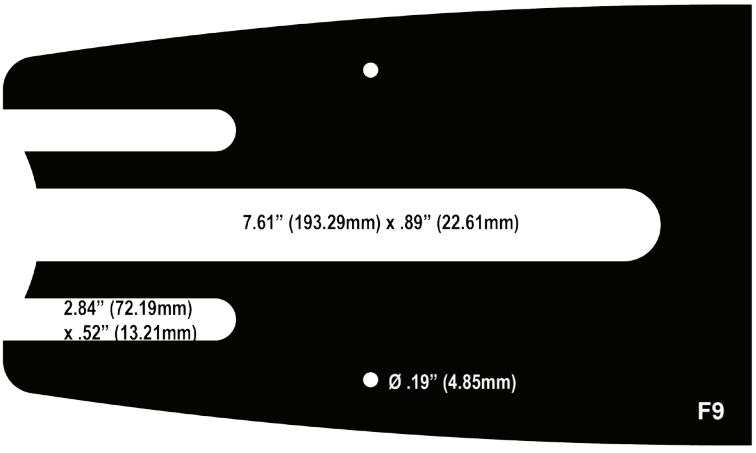

3/4 Pitch

Cannon F9

Oregon T229

J1

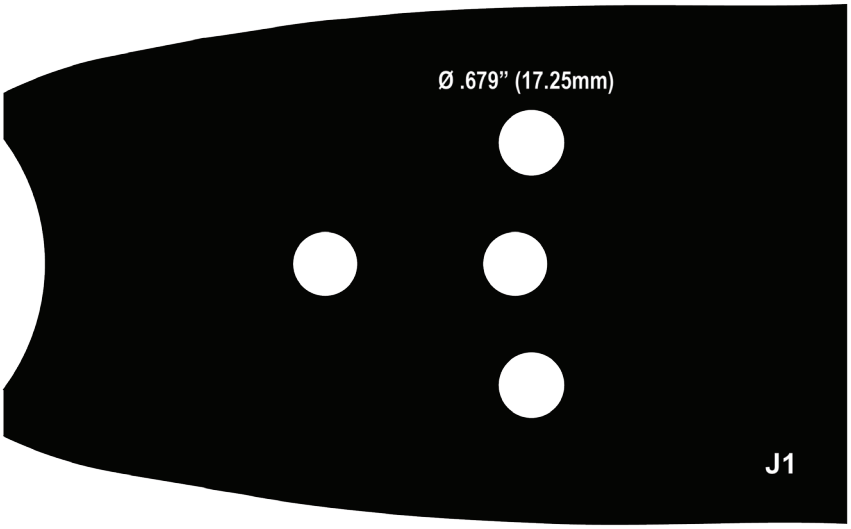

3/4 Pitch

Cannon J1

Oregon T222

J3

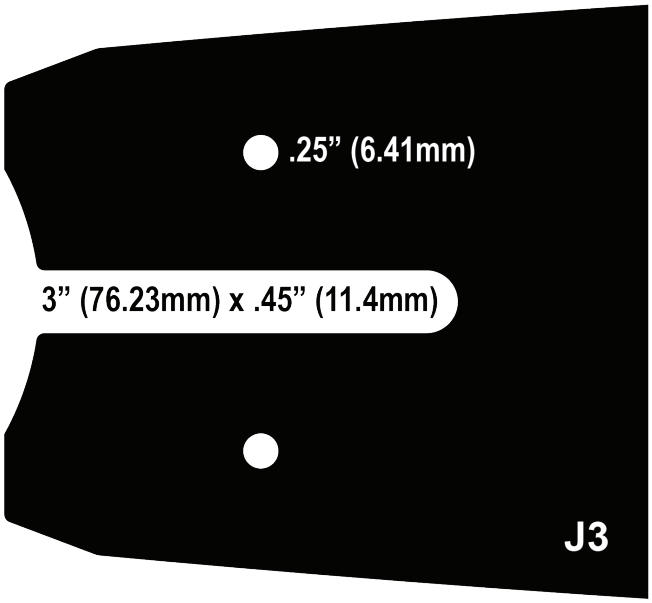

3/4 Pitch

Cannon J3

Oregon N/A

K5

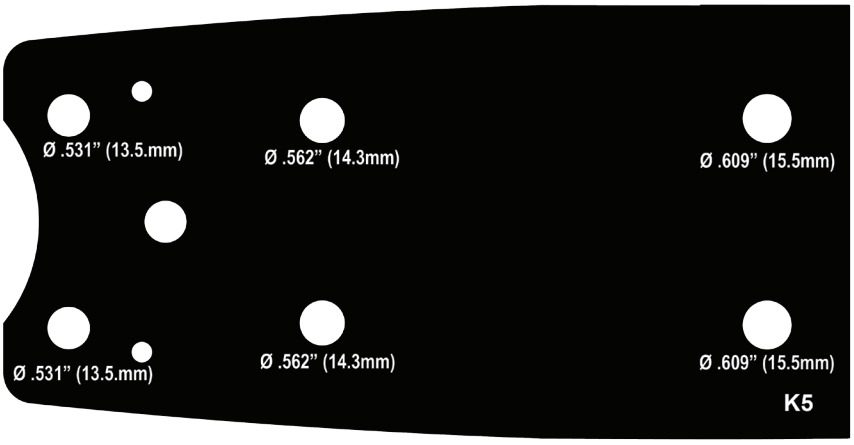

3/4 Pitch

Cannon K5

Oregon T043SN, T043AT

K7

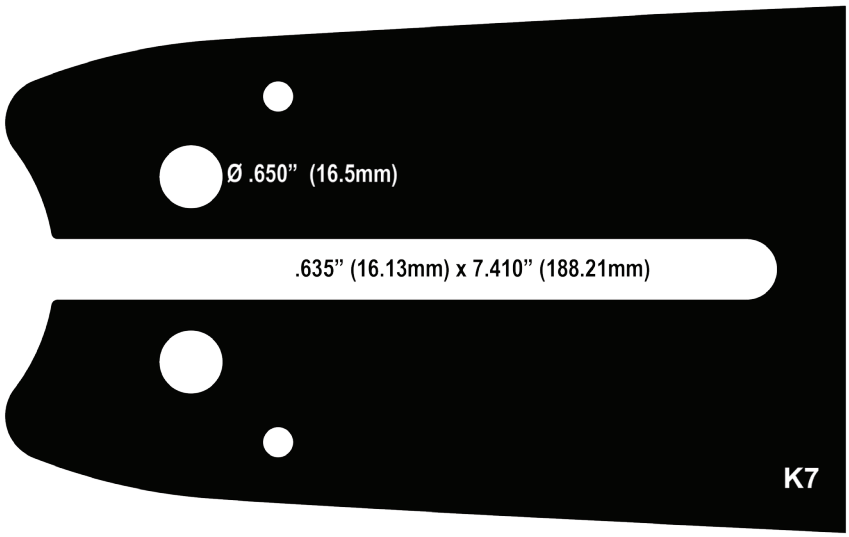

3/4 Pitch

Cannon K7

Oregon T138

K8

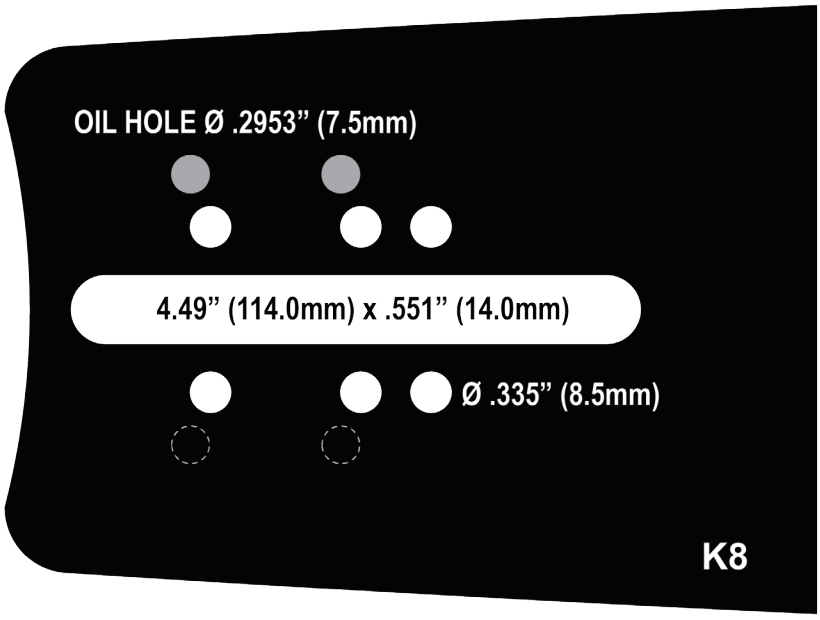

3/4 Pitch

Cannon K8

Oregon K205

K9

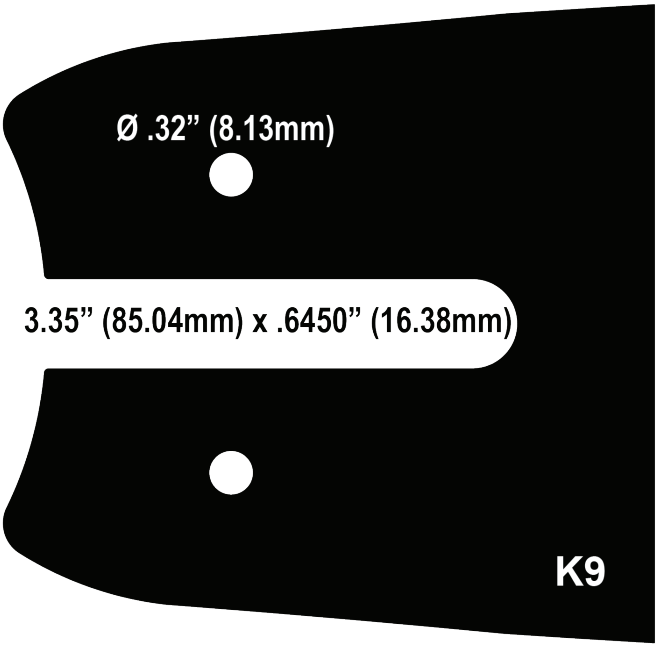

3/4 Pitch

Cannon K9

Oregon C159

N3

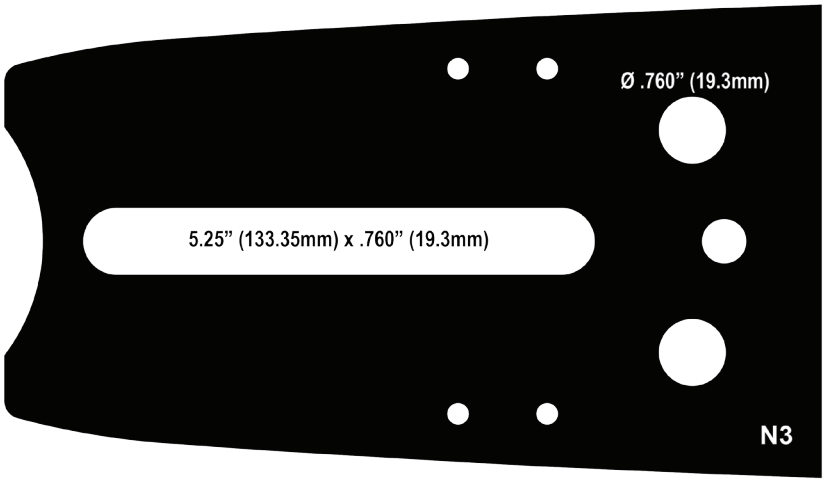

3/4 Pitch

Cannon N3

Oregon T190

N5

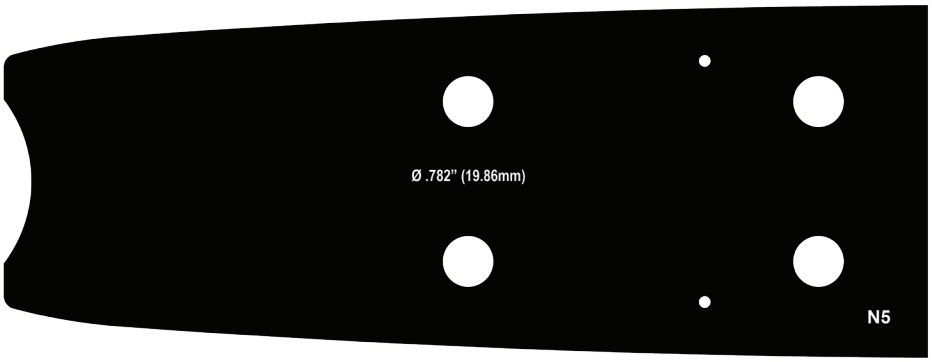

3/4 Pitch

Cannon N5

Oregon T210

N7

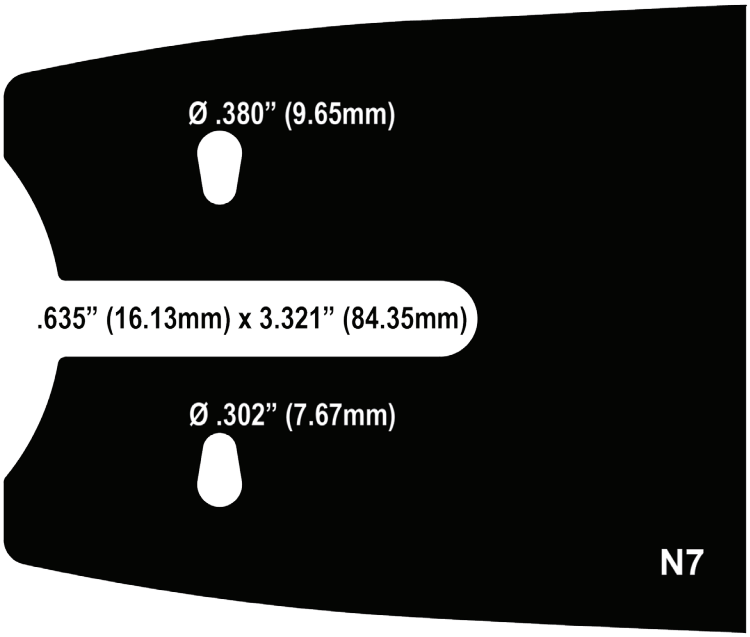

3/4 Pitch

Cannon N7

Oregon T219

N9

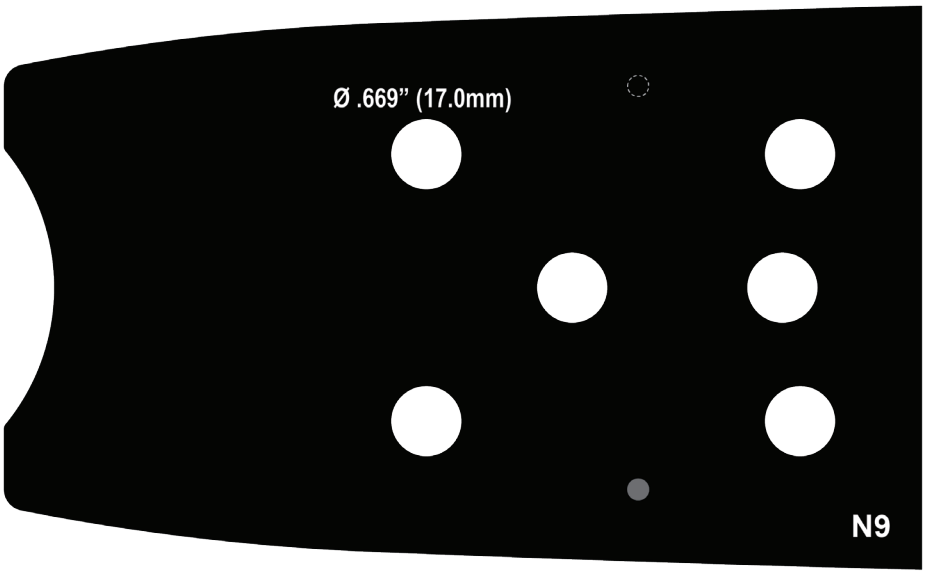

3/4 Pitch

Cannon N9

Oregon T223

Q6

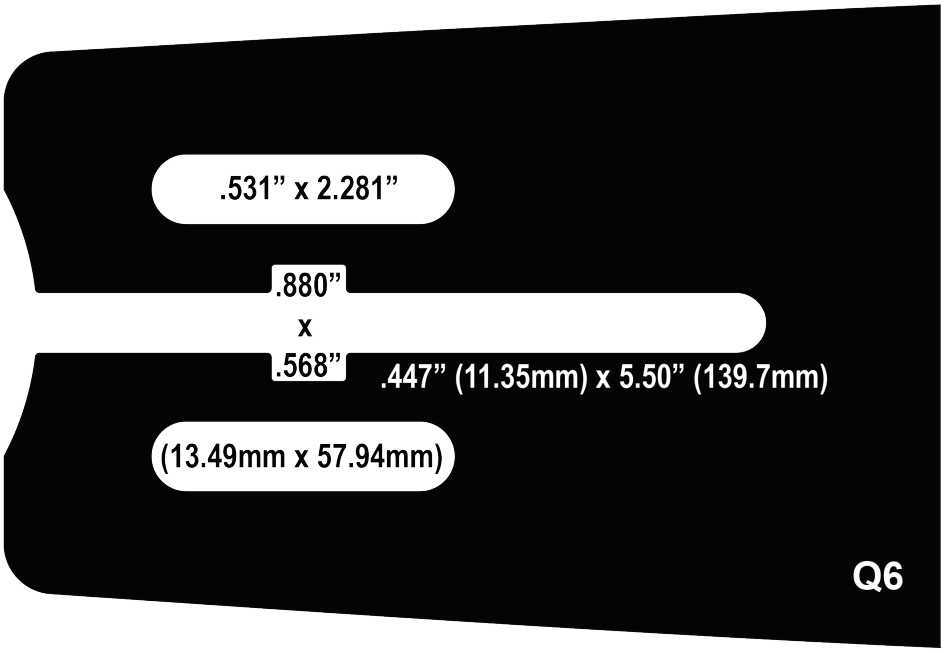

3/4 Pitch

Cannon Q6

Oregon T161

SLASHING BAR MOUNTS
CSL

E1

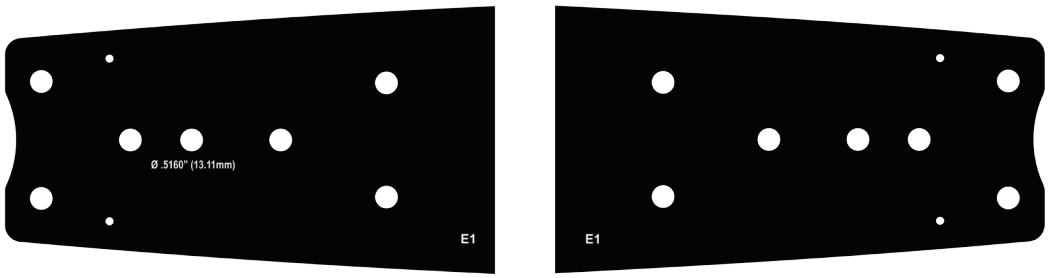

Cannon E1

Oregon 9136, 136

E2

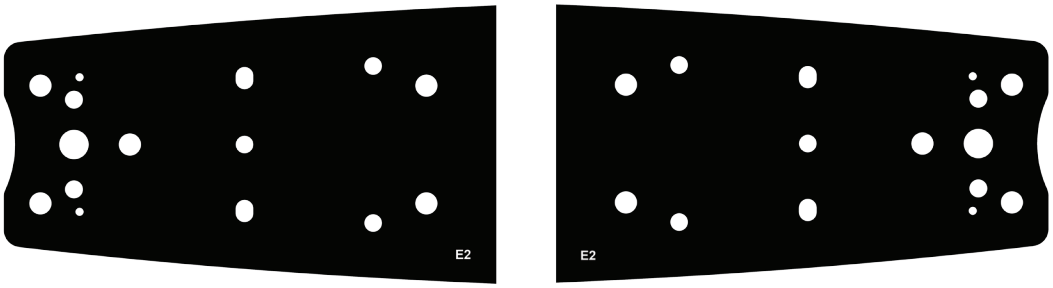

Cannon E2

Oregon 9137, 137

E4

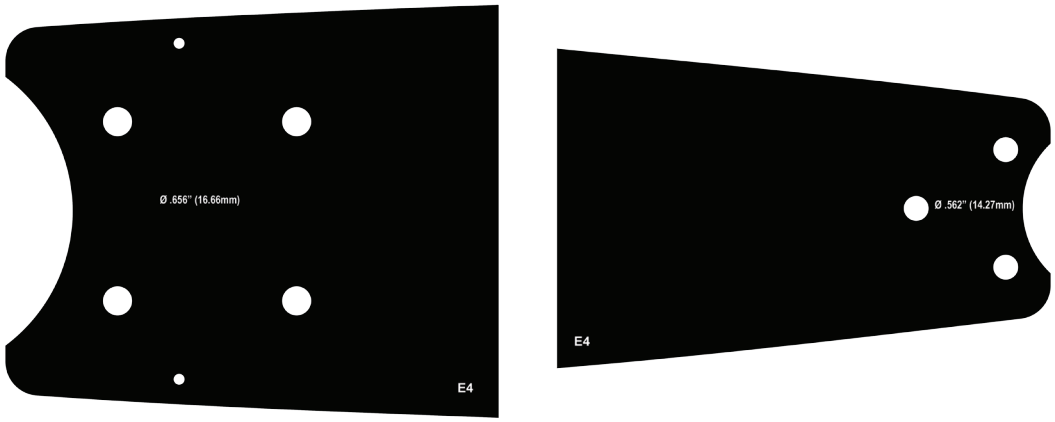

Cannon E4

Oregon 9155

E5

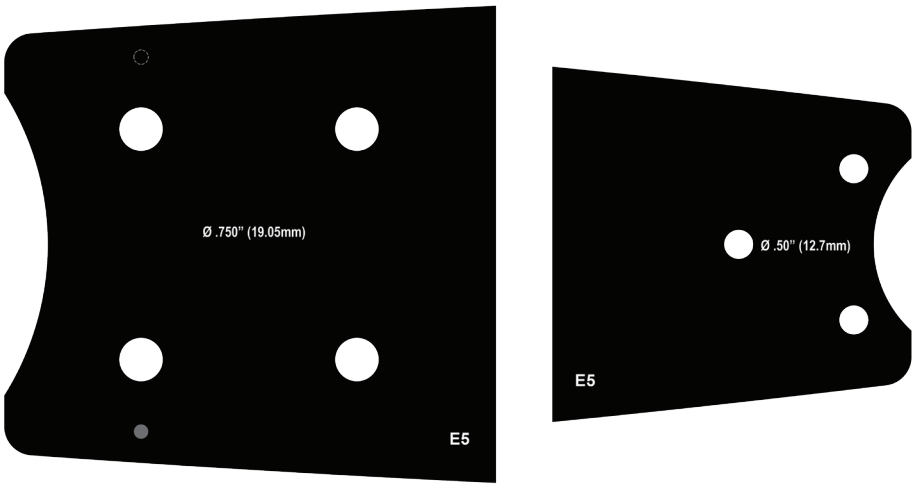

Cannon E5

E9

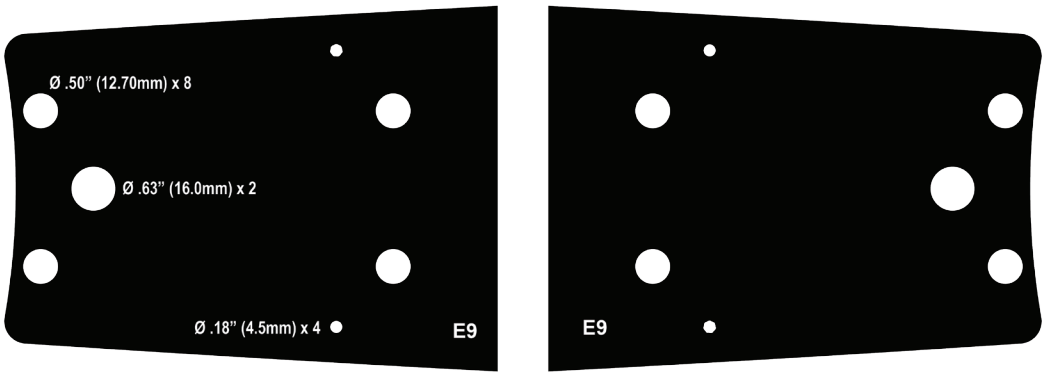

Cannon E9

E10

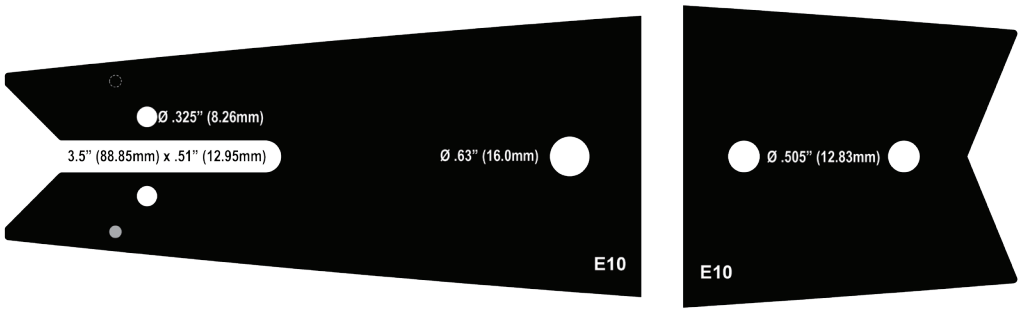

Cannon E10

HT

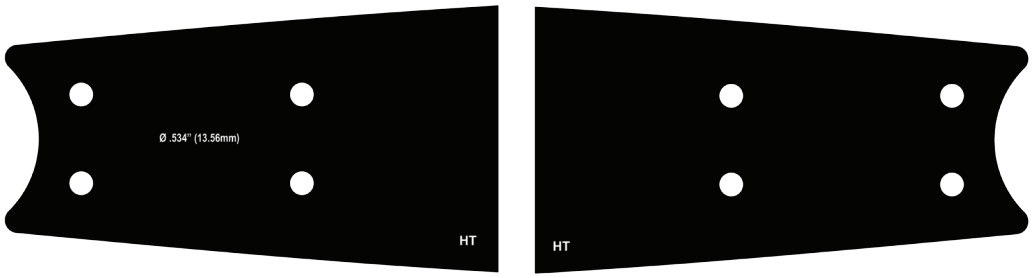

Cannon HT

L4

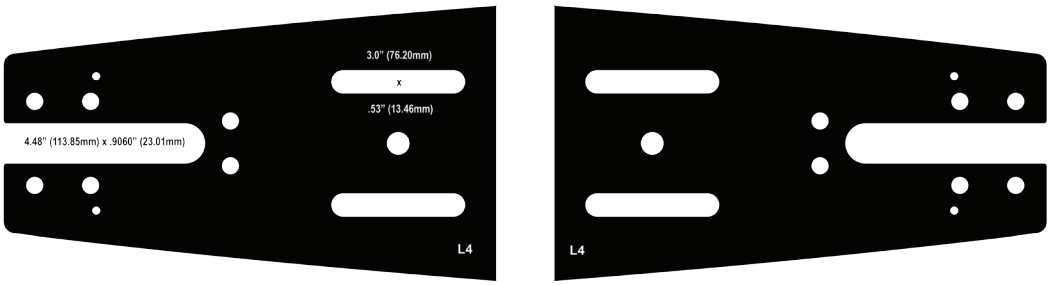

Cannon L4

ST

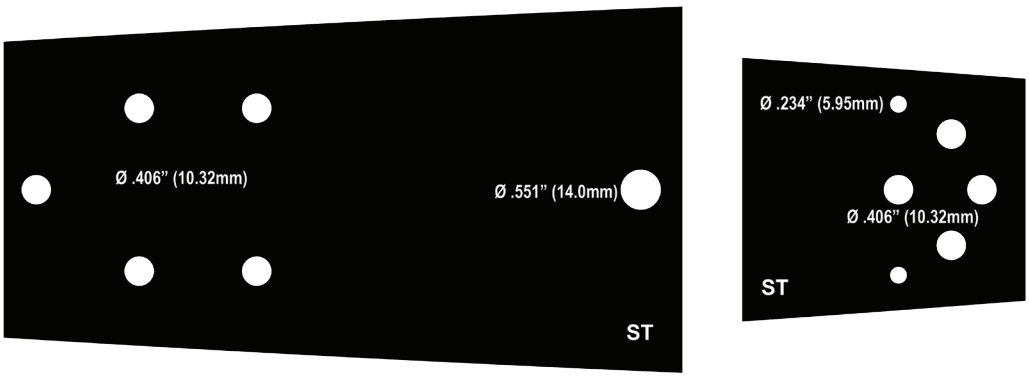

Cannon ST

PACKAGING BAR MOUNTS
CPB

E2

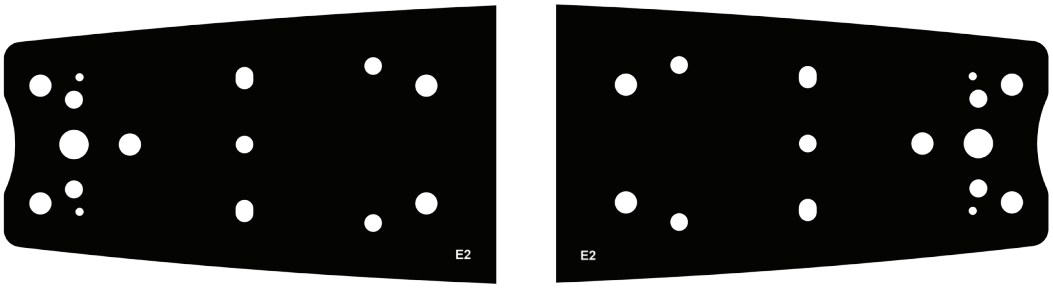

OEM Applications
L - M

Cannon E2

Oregon 9137, 137

HT

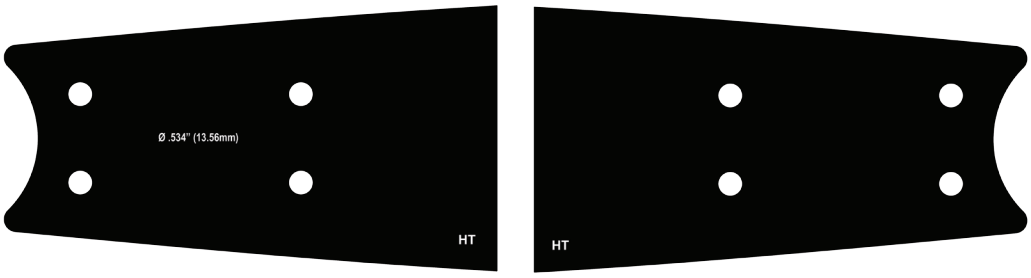

OEM Applications
Holtec

Cannon HT

PU

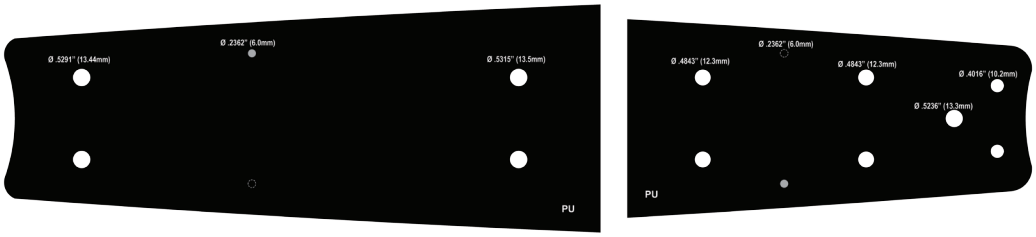

Cannon PU

RT

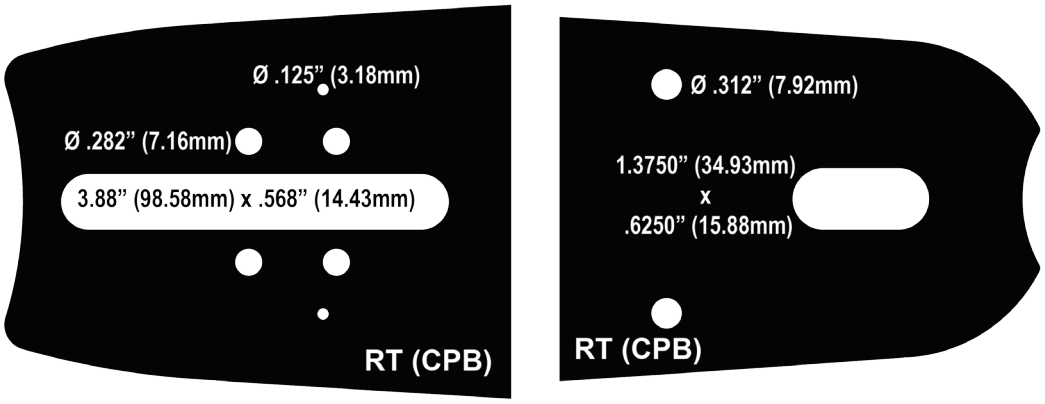

OEM Applications
Ramtech

Cannon RT

T1

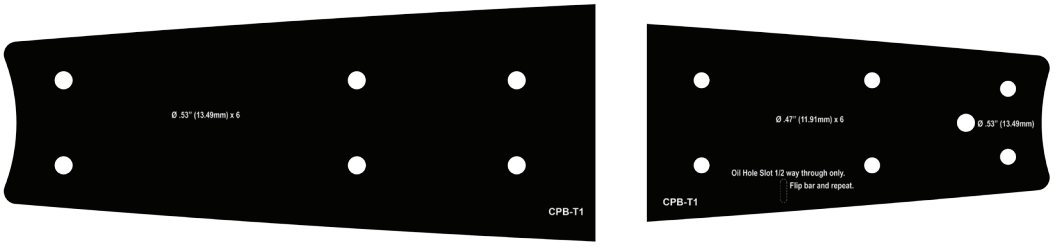

OEM Applications
Trail

Cannon T1

PRUNING BAR MOUNTS
CPP

H8

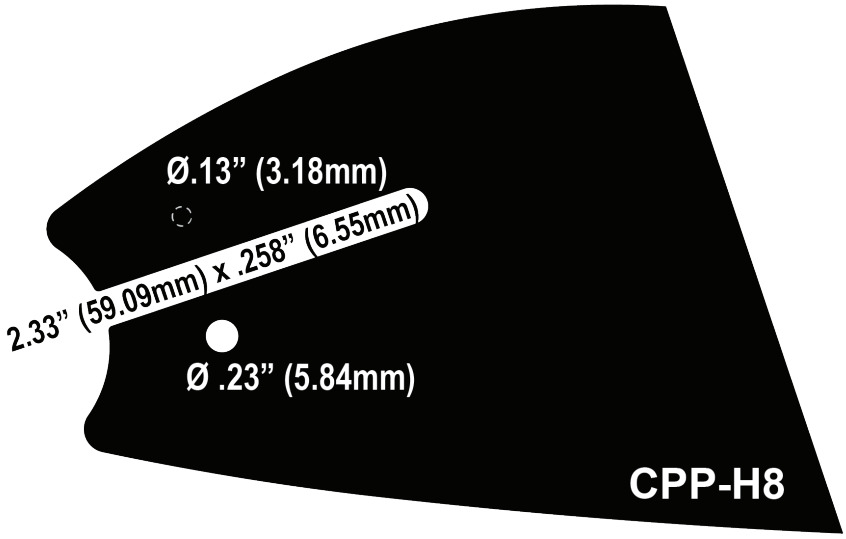

OEM Applications
Husqvarna Pole Saws
with 6.4 mm studs

Cannon H8

Oregon A318

C1

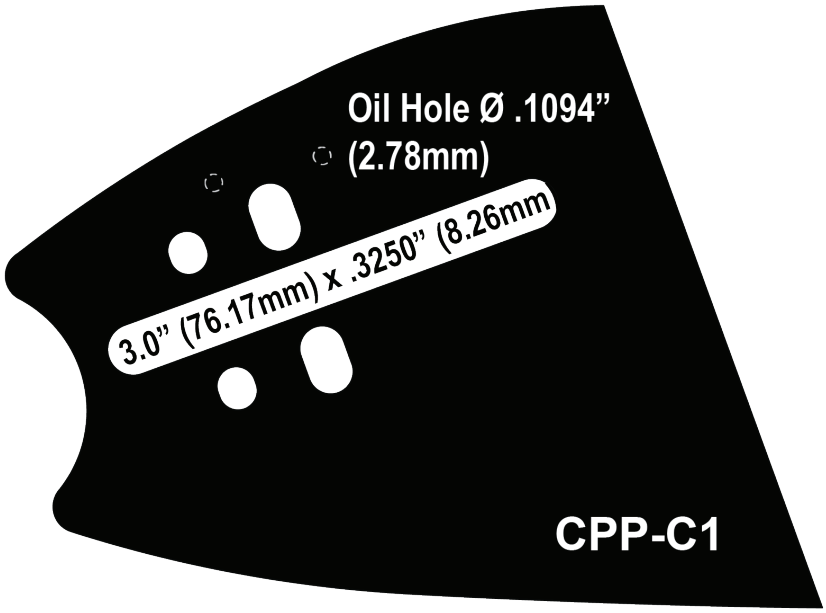

OEM Applications
Most small Dolmar, Echo,
Husqvarn, Jonsered, Makita,
Poulan, Shindaiwa and
Stihl models

Cannon C1
Combination Mount
for 8.2 mm studs

Oregon A041, K041,
A074, A095, K095

Stihl 3005

P5

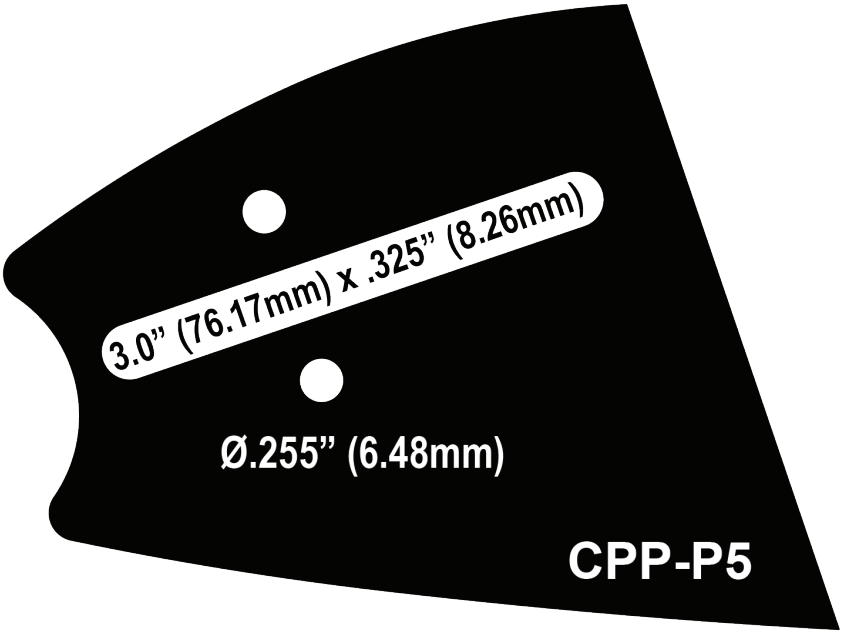

OEM Applications
Echo Pole Saws
with 8.2 mm studs

Cannon P5

Oregon A041

S5

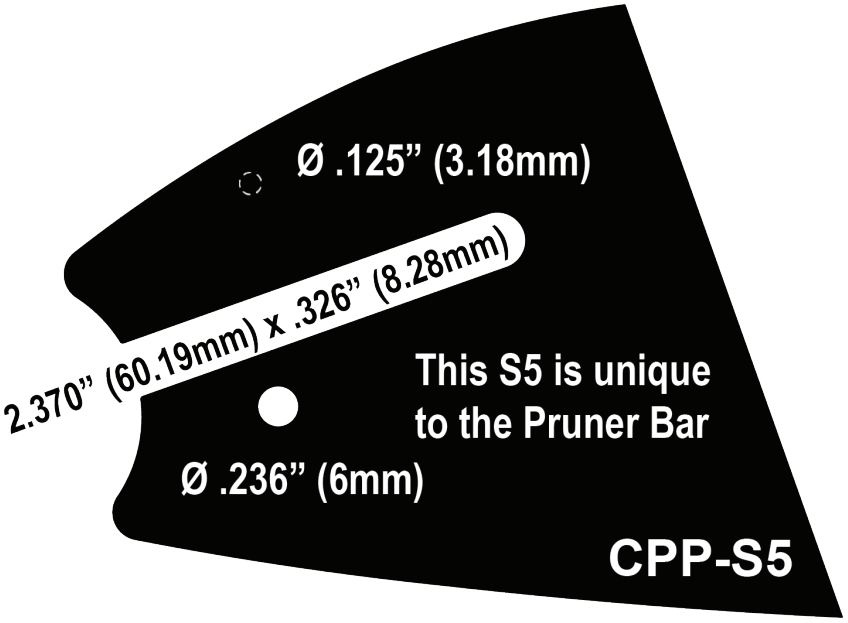

OEM Applications
Stihl Pole Saws
with 8.2 mm studs

Cannon S5

Oregon A074
Stihl 3005

H1

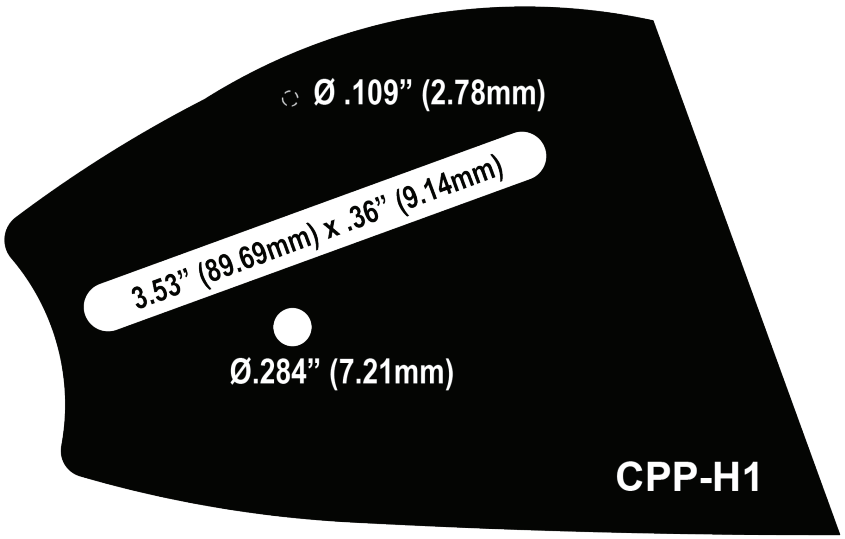

OEM Applications
Dolmar, Husqvarna,
Jonsered, Makita,
Shindaiwa and Solo models
with 9 mm studs

Cannon H1

Oregon D009

S1

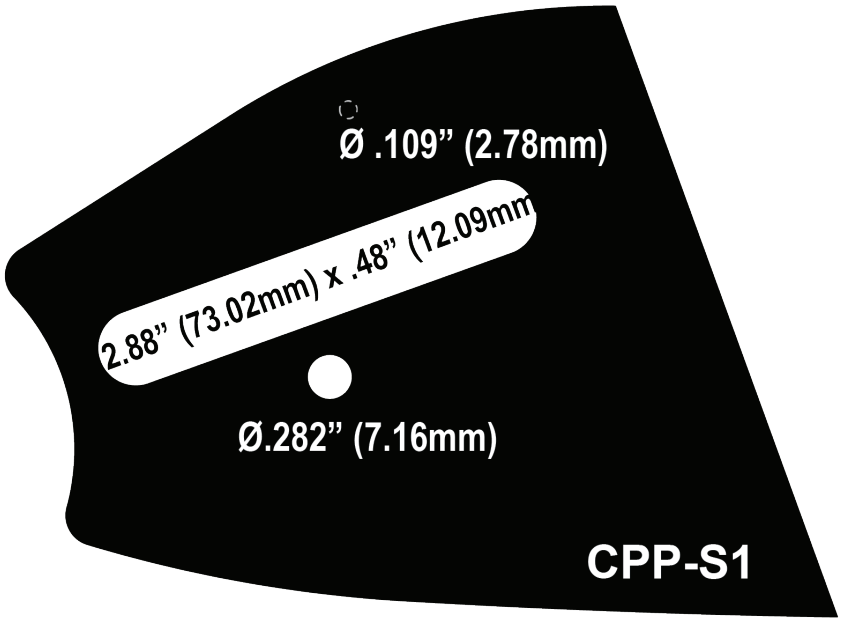

OEM Applications
Stihl models
with 12.1 mm studs

Cannon S1

Oregon D025

Stihl 3003